MSE 429/894 – Assignment 3

15 **Problem 1**: Sketch the fingertip workspace of the three-link manipulator shown below for the case $L_1 = 15$, $L_2 = 10$, and $L_3 = 3$. You may include an isometric as well as a cross-section view.

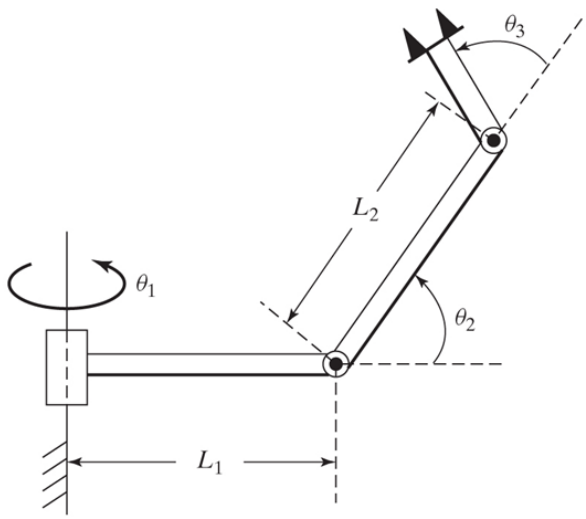

Solutions:
The radius of the inner hollow region of the toroid is 7“. The distance between the central joint and the out edge of the toroid is 28” inches. The distance between the inner edge and the axis of rotation is 2”.

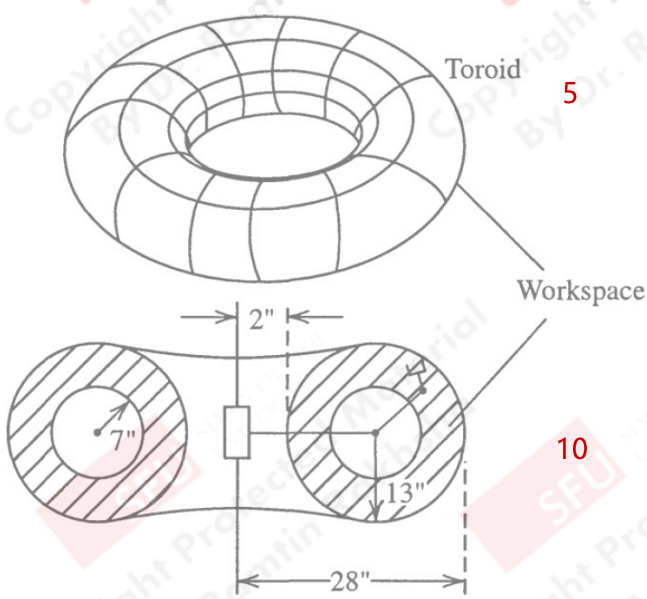

30 **Problem 2**: For the manipulator shown in problem 1, derive the inverse kinematics for the case where the only the desired position (no rotation) of the last link is known.

Hint: start with assuming ${}^{3}P_{\text{tool}} = L_3\hat{X}_3$.

Solution:

$$ {}^{0}P_{\text{tool}} = \begin{bmatrix} P_x \\ P_y \\ P_z \end{bmatrix} = \begin{bmatrix} L_1C_1 + L_2C_1C_2 + L_3C_1C_{23} \\ L_1S_1 + L_2S_1C_2 + L_3S_1C_{23} \\ L_2S_2 + L_3S_{23} \end{bmatrix} $$ 6

First,

$$ S_1 = \frac{P_y}{L_1 + L_2C_2 + L_3C_{23}} \quad C_1 = \frac{P_x}{L_1 + L_2C_2 + L_3C_{23}} $$

so, $\boxed{\theta_1 = \text{atan2}(P_y, P_x) \text{ or } \text{atan2}(-P_y, -P_x)}$ 5

Since the sign of the "$L_1 + L_2C_2 + L_3C_{23}$" term may be $+$ or $-$.

Next, define:

$$ \alpha = \begin{cases} \dfrac{P_x}{C_1} - L_1 & \text{if } C_1 \neq 0 \\ \dfrac{P_y}{S_1} - L_1 & \text{if } S_1 \neq 0 \end{cases} $$ 4

And we have:

$$ L_2C_2 + L_3C_{23} = \alpha $$

$$ L_2S_2 + L_3S_{23} = P_z $$

Square and add these two equations to get:

$$ L_2^2 + L_3^2 + 2L_2L_3C_3 = \alpha^2 + P_z^2 $$

$$ C_3 = \frac{1}{2L_2L_3}(\alpha^2 + P_z^2 - L_2^2 - L_3^2) $$ 7

$$ S_3 = \pm\sqrt{1 - C_3^2}; \quad \boxed{\theta_3 = \text{atan2}(S_3, C_3)} $$ 3

Finally,

$$ L_3C_{23} = \alpha - L_2C_2 $$

$$ L_3S_{23} = P_z - L_2S_2 $$

so, $\boxed{\theta_2 = \text{atan2}(P_z - L_2S_2, \alpha - L_2C_2) - \theta_3}$ 5

5 **Problem 3**: Given a desired position and orientation of the and of a three-link planar rotary-jointed manipulator, there are two possible solutions. If we add one more rotational joint (in such a way that the arm is still planar), how many solutions are there?

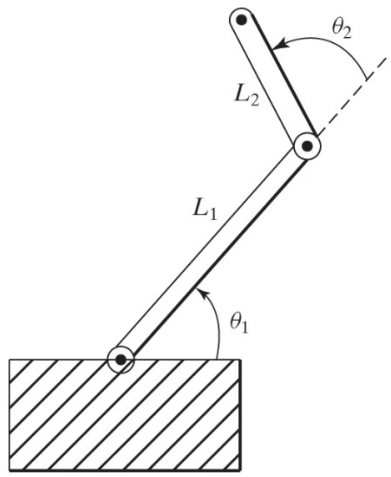

Solution:

There are an infinite number of solutions. Imagine fixing the last link in position and orientation: Then, the first 3 links form a "4-bar linkage" which can take on an infinity of positions since it has a degree of freedom.

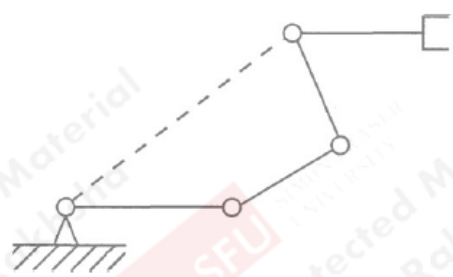

15 **Problem 4**: For the two-link planar arm shown in problem 2, let the second link be half as long as the first – that is, $L_1 = 2L_2$. The joint range limits in degrees are:

$$0 < \theta_1 < 180$$
$$-90 < \theta_2 < 180$$

Sketch the approximate reachable workspace (an area) of the tip of link 2.

Solution:

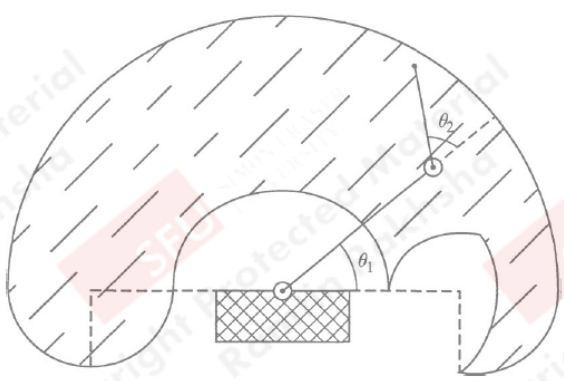

15 **Problem 5**: The following kinematic equations arise in a certain problem:

$$\sin\xi = a\sin\theta + b$$
$$\sin\phi = c\cos\theta + d$$
$$\psi = \xi + \phi$$

Given $a, b, c, d,$ and ψ, show that, in the general case, show that, there are four solutions for θ. Find a special condition under which there are joist two solutions for θ.

Solution:

Just plug in the $\tan\theta/2$ substitution and collect terms. You'll find you arrive at a quartic in U. You'll also see a condition in which the coefficients of U^3 and U become zero — so it becomes quadratic in U^2.

20 **Problem 6**: A 4R manipulator is shown schematically. The nonzero link parameters are $\alpha_1 = -90^o$, $d_2 = 1$, $\alpha_2 = 45^o$, $d_3 = 1$, and $a_3 = 1$ and the mechanism is pictured in the configuration corresponding to $\Theta = [0,0,90^o,0]^\top$. Each join has $\pm 180^o$ as limits. Find all values of θ_3 such that

$$^0P_{4_{ORG}} = [1.29, 1.99, 0.0947]^\top.$$

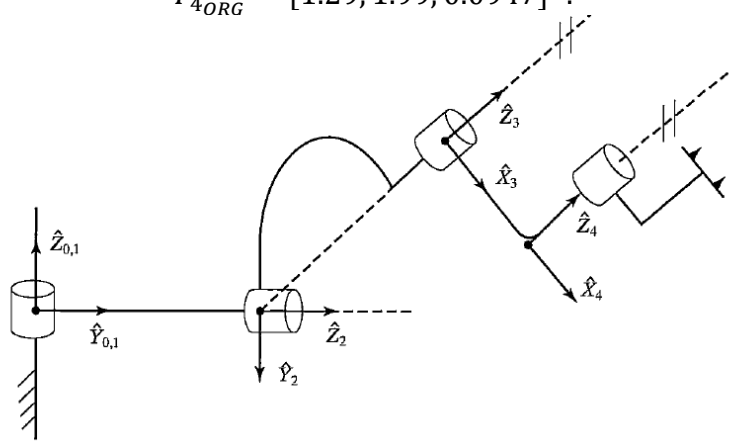

Solution:

$\alpha_1 = -90^\circ$ $\quad a_1 = 0$ $\quad \vec{\theta} = [\theta_1\ \theta_2\ \theta_3\ \theta_4]^T$

$d_2 = 1$ $\quad d_4 = 0$ $\quad = [0^\circ, 0^\circ, 90^\circ, 0^\circ]^T$

$\alpha_2 = 45^\circ$ $\quad a_2 = 0$

$d_3 = 1$ $\quad \alpha_3 = 0$

$a_3 = 1$

USING SLIDE 22 FROM CHAPTER 4, ITEM ①

$r = k_3$ (USING PIEPERS METHOD)

FROM SLIDE #21, $\left({}^0\vec{P}_4\right)_{ORG} = \begin{bmatrix} c_1 g_1 - s_1 g_2 \\ s_1 g_1 + c_1 g_2 \\ g_3 \end{bmatrix} = \begin{bmatrix} 1.29 \\ 1.99 \\ 0.0947 \end{bmatrix}$ 6

$r = x^2 + y^2 + z^2 = (1.29)^2 + (1.99)^2 + (0.0947)^2$

$\Rightarrow \boxed{r = 5.639}$ (I) 4

$f_1 = \cancel{a_3}^{1} c_3 + \cancel{d_4}^{0} s\alpha_3 s_3 + \cancel{a_2}^{0} = c_3$

$f_2 = \cancel{a_3}^{1} \cancel{c\alpha_2}^{\frac{\sqrt{2}}{2}} s_3 - \cancel{d_4}^{0} s\alpha_3 c\alpha_2 c_3 - \cancel{d_4}^{0} s\alpha_2 c\alpha_3 - d_3 s\alpha_2 = \frac{\sqrt{2}}{2}(s_3 - 1)$ $\quad -\frac{\sqrt{2}}{2}$

$f_3 = \cancel{a_3}^{1} \cancel{s\alpha_2}^{\frac{\sqrt{2}}{2}} s_3 - \cancel{d_4}^{0} s\alpha_3 s\alpha_2 c_3 + \cancel{d_4}^{0} \cancel{c\alpha_2}^{\frac{\sqrt{2}}{2}} \cancel{c\alpha_3}^{1} + \cancel{d_3}^{1} \cancel{c\alpha_2}^{\frac{\sqrt{2}}{2}} = \frac{\sqrt{2}}{2}(s_3 + 1)$

$f_1^2 + f_2^2 + f_3^2 = c_3^2 + \frac{1}{2}(s_3 - 1)^2 + \frac{1}{2}(s_3 + 1)^2$

$c_3^2 + \frac{1}{2}s_3^2 + \frac{1}{2} - s_3 + \frac{1}{2}s_3^2 + s_3 + \frac{1}{2} = c_3^2 + s_3^2 + 1 = 2$

$\Rightarrow K_3 = \underbrace{f_1^2 + f_2^2 + f_3^2}_{2} + \cancel{a_1^2}^{0} + \cancel{d_2^2}^{1} + 2\cancel{d_2}^{1} f_3 + 2\left(\frac{\sqrt{2}}{2}\right)(s_3 + 1)$ $\quad = 3 + \sqrt{2}\, s_3 + \sqrt{2}$

$\Rightarrow \boxed{K_3 = 4.412 + 1.4142\, s_3}$ (II)

EQUATING EQ'S (I) & (II):

$5.639 = 4.412 + 1.414\, s_3$ 6

$\Rightarrow \boxed{s_3 = 0.866} \Rightarrow$ SINCE $-180^\circ < \theta_3 < 180^\circ \Rightarrow \theta_3 = 60^\circ$ OR $\theta_3 = 120^\circ$ 4

Copyright Protected Material By Dr. Ramtin Rakhsha